Infinity Corrected Optical System

MT9900 Series

POLARIZING MICROSCOPES

Incident and Transmitted Light models

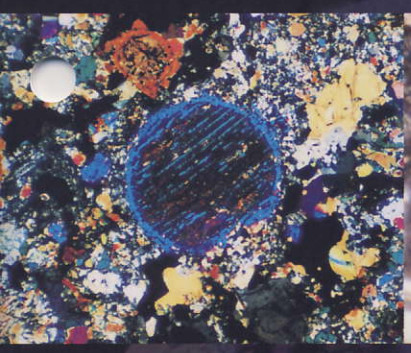

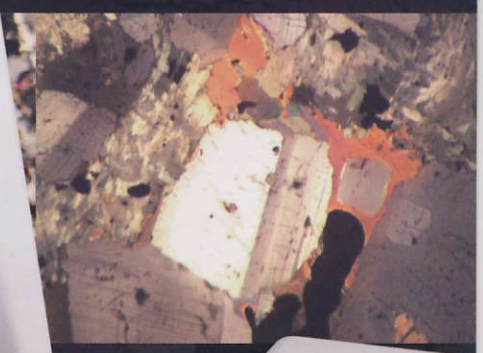

MT9920

MEIJI TECHNO

info@ysctech.com www.ysctech.com Tel 510.226.0889

MEIJI TECHNO MT9900 Series

MT9900 Series Polarizing Microscopes
Infinity corrected optical systems for transmitted and Incident light use.

Meiji Techno's MT9900 Series of Polarizing Microscopes are versatile, modular, ergonomic micro-scope systems designed for student, advanced educational or routine laboratory use. The MT9900 Series features all new Strain Free Infinity Corrected Optics, large ceramic coated rotatable stages with greater wear resistance, and a newly engineered ergonomically designed frame that is rugged, stable, yet flexible with a slim compact footprint that fits nicely in your workspace. A perfect instrument for Geology and Petrology applications.

Features

Eyepieces:
One KHW10X Focusing eyepiece with cross-line and guide pin, FN20 and one KHW10X eyepiece, FN 20.

Viewing Head:
The MT9900 Series Polarizing Microscope is equipped with either Siedentopf type binocular or Siedentopf type Trinocular viewing head, inclined at 30°, with reticle angle adjustment system. Optional tilting ergonomic binocular head - adjustable vertically from 10° to 50° available.

Nosepiece:
Reverse Facing, quadruple, ball bearing nosepiece with one fixed and three centerable objective positions. Two objective centering tools are included.

Objectives:
Strain Free Plan POL Objectives for **Transmitted Light Work**
Plan 4X/N.A.0.10, W.D. 15.3mm
Plan 10X/N.A.0.25, W.D. 7.3mm
Plan 20X/N.A.0.40, W.D. 5.0mm (Optional)
Plan 40XS/N.A.0.65, W.D. 0.72mm
Plan 60XS/N.A.0.85, W.D. 0.2mm (Optional)
Plan 100XS/N.A. l.25, W.D. 0.14mm (Optional)
Strain Free Plan POL Objectives for **Incident Light Work**
Plan 4X/N.A.0.10, W.D. 15.3mm (Optional)
Plan 10X/N.A.0.25, W.D. 7.3mm (Optional)
Plan 20X, N.A.040, W.D. 5.2mm (Optional)
Plan 40X, N.A.0.65, W.D.0.81mm (Optional)

Intermediate Tube:
Orthoscopic / Conoscopic intermediate tube with a rotatable analyzer, focusable and centerable Bertrand lens and a compensator slot to accept test plates. (Compensator slot accepts a Slider for 1st Order Red plate and 1/4 wave plate, or optional Quartz Wedge and Senarmont compensator)

Compensators (Test Plate):
Three position test plate with one 1st Order Red Plate (Gypsum, first order red, sensitive tine 530nm) and, one 1/4 wavelength retardation plate (Mica 147.3nm) and with one empty position.

Polarizer:
Rotatable polarizer in swing-out mount with detent at 0°and 90°.
Rotatable analyzer

Stage:
175mm diameter, ball bearing, circular rotating stage. Graduated 360°, with 1° increments and Vernier reading to 0.1°. Includes 2 stage clips. (Optional attachable mechanical and point counting stages are available.)

Condenser:
Strain-free Abbe condenser, N.A. 1.25 **with swing out top lens**, iris diaphragm in dovetail mount. Mounted in a center-able condenser holder with a rack and pinion adjustment.

Illuminator:
Built-in **transmitted Koehler illuminator** with continuously variable intensity control and 6V 30W halogen lamp. Automatic voltage (100V to 240V) sensing power supply and variable rheostat control are built into the microscope base.
Vertical illuminator with full Koehler design equipped with 6V 30W Halogen light source, field iris, aperture iris and filter slots. With a separately cased automatic voltage (100 to 240V) sensing power supply and variable rheostat control.

Filter:
29.8mm diameter daylight-type blue filter for correct color rendition.

Focusing Controls:
Ergonomically low positioned coaxial coarse and fine focusing controls. Coaxial fine focus knob: 0.2mm per rotation; Coarse: 26mm per rotation; Minimum reading 2 microns on right side knob.

Size and Weight:
Footprint: 263mm (D) x 176mm (W)
MT9920 : 212mm (W) x 297mm (D) x 504mm (H), 11.4Kg
MT9930 : 212mm (W) x 297mm (D) x 558mm (H), 12.2Kg

The picture shows Model MT9930 with an optional digital camera and a mechanical stage mounted. Separately cased transformer for vertical illumination is not shown but it is supplied always.

info@ysctech.com www.ysctech.com Tel 510.226.0889

COMPONENTS AND ACCESSORIES AVAILABLE FOR THE MT9900 Series

VIEWING HEAD

MA952 Binocular head - Siedentopf type, inclined at 30 degrees with reticle angle compensation, I.P. adjustment 53mm to 75mm, graduated diopter on left eyetube. (23.2mm I.D. eyetube). (Included in model MT9920)

MA953 Trinocular head - Siedentopf type, inclined at 30 degrees with reticle angle compensation, I.P. adjustment 53mm to 75mm, graduated diopter on left eyetube. (23.2mm I.D. eyetube). (Included in model MT9930)

EYEPIECES

MA407CP KHW-10X Focusing eyepiece with cross-line and guide pin (each) (21mm reticle mount) (Tube O.D.23.2mm)

MA407 KHW-10X Compensating eyepiece, F.N.20 (each) (Tube O.D.23.2mm)

MA407/05 KHW-10X Compensating Focusing eyepiece, F.N.20 (each) (Tube O.D.23.2mm)

PLANACHROMAT POL OBJECTIVES FOR TRANSMITTED LIGHT WORK

MA935 Strain free Plan objective 4X/N.A.0.10, W.D. 15.3mm

MA936 Strain free Plan objective 10X/N.A.0.25, W.D. 7.3mm

MA937 Strain free Plan objective 20X/N.A.0.40, W.D. 5.0mm

MA938 Strain free Plan objective 40XS/N.A.0.65, W.D. 0.72mm

MA939 Strain free Plan objective 60XS/N.A.0.85, W.D. 0.2mm

MA940 Strain free Plan objective 100XS/N.A.1.25 oil, W.D. 0.14mm

PLANACHROMAT POL OBJECTIVES FOR INCIDENT LIGHT WORK

MA935 Strain free Plan objective 4X/N.A.0.10, W.D. 15.3mm

MA936 Strain free Plan objective 10X/N.A.0.25, W.D. 7.3mm

MA947 Strain free Plan objective 20X/N.A. 0.40, W.D. 5.2mm

MA948 Strain free Plan objective 40XS/N.A. 0.65, W.D. 0.81mm

CONDENSER

MA976/05 Strain free Abbe condenser, N.A. 1.25 with swing out top lens, iris diaphragm and filter tray in dove tail mount

STAGE AND STAGE ACCESSORIES

MA299 Attachable mechanical stage for MT9900 Series, 25mm X 25mm movement.

MA945 Attachable mechanical stage for MT9900 Series with Point Counter. Interchangeable point counting knobs with intervals of 0.1mm, 0.2mm, 0.5mm and 1mm. 25mm X 25mm movement.

MA946 Stage Clips (2 pcs)

WAVE PLATES AND COMPENSATORS

MA988 Slider for 1/4 Wave-length test plate and first order red compensating plate (with one open position) for MT9900 Series (20mm x 6mm x 142mm)

MA654/10 Quartz Wedge, 6 order, graduated for MT9900 Series (20mm x 6mm x 150mm)

MA904/10 Senarmont compensator (A highly accurate 1/4 wave plate used to measure retardation)

MA956/05 Rotatable analyzer

COMPONENTS FOR REFLECTED LIGHT MICROSCOPY

MA955 Vertical illuminator attachment, 6V 30W Halogen Koehler

MA927/05 Vertical illuminator table-top transformer in case (Input voltage 100V-240V)

MA679 Polarizer in mount

MA475/05 Blue clear filter in mount

MA198 ND8 Neutral density filter in mount

MISCELLANEOUS

MA289/05 Clear blue filter ϕ29.8mm

MA200 Eyeshield for MA407 KHW10X Eyepiece

MA326 Spare halogen bulb 6V 30W

MA327 Spare fuse 3A

MA711 Dust cover

MA809/10 Removable AC Electric cord with UL Plug for 115V models

MA809/20 Removable AC Electric cord with European Plug for 220V models

MA809/30 Removable AC Electric cord with UK Plug for 240V models

MA905 Interference Color Chart

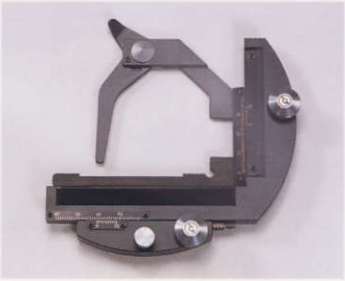

MA299 Mechanical stage

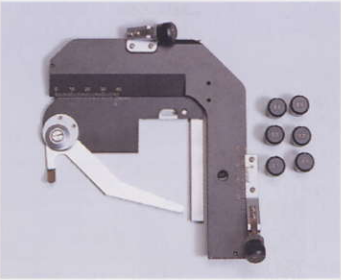

MA945 Point counter

Gabbro
Reflected light

Pyroxene andesite

Piemontite schist

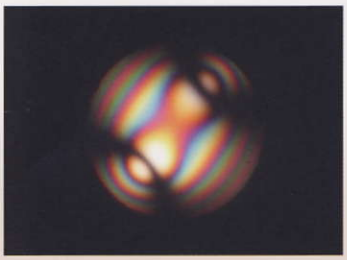

Biaxial Interference figure
Aragonite

DIGITAL 35mm SLR CAMERAS

Following three accessories are required for 35mm SLR camera photomicrography

1. Camera Attachment

MA150/50 Camera attachment to fit to photo tube of trinocular models

MA150/60 Camera attachment as above, but with eyepiece finder

2. Photo Eyepiece

MA512 Photo eyepiece 2.5X (Magnifies objective power by 2.5X at the film plane)

MA508 Photo eyepiece 5X (Magnifies objective power by 5X at the film plane)

MA500 Photo eyepiece 3.3X (Magnifies objective power by 3.3X at the film plane, with reticle mount)

3. T-2 Adapter Ring

T2-1 Adapter ring for CANON camera

T2-2 Adapter ring for MINOLTA camera

T2-3 Adapter ring for PENTAX K, RICOH-XR camera

T2-4 Adapter ring for PENTAX S camera

T2-5 Adapter ring for NIKON camera

T2-6 Adapter ring for OLYMPUS camera

T2-7 Adapter ring for CONTAX, YASHIKA camera

T2-8 Adapter ring for KONICA camera

T2-9 Adapter ring for CANON EOS camera

T2-10 Adapter ring for MINOLTA α, MAXIM 2000 camera

Photo Eyepiece

T2 Adapter Ring

MA150/60 Camera attachment

MA150/50 Camera attachment

DIGITAL CAMERA ADAPTERS

MA151/30/73 Digital camera adapter for use with Canon Powershot A610, A620, A630, A640, etc.

MA151/30/58 Digital camera adapter for use with Nikon Coolpix P5000, P5100, etc.

MA151/30/63 Digital camera adapter for use with Olympus Camedia C-750, C-755, C-760, SP500-UZ, etc.

CCD VIDEO & USB 2.0 DIGITAL CAMERAS

CK3900N CCD Color TV camera. 1/2" CCD, 450 TV lines of resolution, NTSC system with DC12V adapter

CK3900P CCD Color TV camera. 1/2" CCD, 450 TV lines of resolution, PAL system with DC12V adapter

DK3000 3.1 megapixel, color digital video microscopy camera with high speed USB 2.0 interface, 1/2 format 6.5mm x 4.9mm image sensor with 2048 x 1536 resolution.

CK3900

DK3000

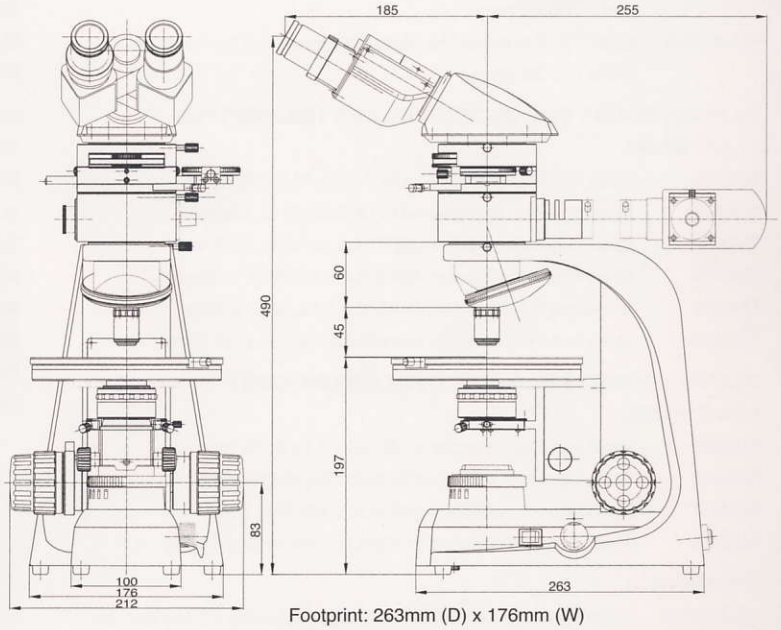

Footprint: 263mm (D) x 176mm (W)
MT9920 : 212mm (W) x 297mm (D) x 504mm (H), 11.4Kg
MT9930 : 212mm (W) x 297mm (D) x 558mm (H), 12.2Kg

MT9900 Series ORDERING INFORMATION

MODEL	BODY	OBJECTIVES	EYEPIECES	STAGE	CONDENSER	ILLUMINATOR
MT9920	Binocular (Siedentopf)	Strain Free Plan 4X Plan 10X Plan 40X	(1) KHW10XCP Focusing with guide pin and crossline reticle (1) KHW10X F.N.20 (O.D. 23.2mm)	Rotatable with 360° graduation with vernier	Strain Free Abbe N.A.1.25 Swing out top lens	Transmitted light Koehler 6V 30W Halogen and Incident light Koehler 6V 30W Halogen
MT9930	Trinocular (Siedentopf)					

Agent :

MEIJI TECHNO CO.,LTD.
322-1, Chikumazawa Miyoshi-machi,
Iruma-gun Saitama 354-0043, Japan
Tel : (0)49-259-0111 Fax : (0)49-259-0113
E-mail : meiji@meijitechno.co.jp
http://www.meijitechno.com

MEIJI TECHNO AMERICA
3010 Olcott Street, Santa Clara, CA 95054, USA
Tel : 408-970-4799 Fax : 408-970-5054
Toll free : 800-832-0060
E-mail : sales@meijitechno.com
http://www.meijitechno.com

MEIJI TECHNO

Specifications and design subject to change without notice for improvements.

'08. 09. 328. 10,000 V1 Printed in Japan

info@ysctech.com www.ysctech.com Tel 510.226.0889